Review to electronics 1

Text Book: Electronic devices (conventional current edition) 8th edition, Floyd, 2008

Chapter 5 review

1 - The DC Operating Point

- A transistor must be properly biased with a dc voltage in order to operate as a linear amplifier (without distortion in output ac voltage).

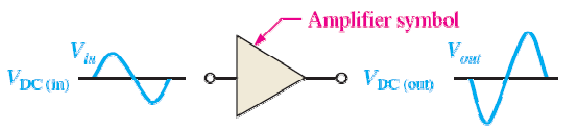

(a) Linear operation: larger output has same shape as input except that it is inverted

- The nonlinear operation is when we have distortion in the output voltage V_{ce} as shown:

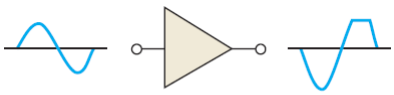

(b) Nonlinear operation: output voltage limited (clipped) by cutoff

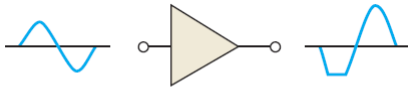

(c) Nonlinear operation: output voltage limited (clipped) by saturation

- The operating point can be set on I_C vs. V_{CE} graph by calculating I_B, I_C, and V_{CE} for the Q-point. They can be calculated depending on the values of V_{CC}, V_{BB}, R_B, and R_C.
- For example: if V_{in} is applied (see circuit below) cause I_B to increase and decrease 100 µA (*ac* base current I_b) above and below I_{BQ}

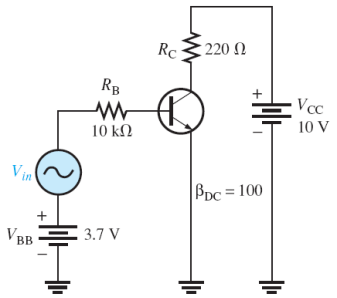

$$I_{C(sat)} = \frac{V_{CC}}{R_C}$$

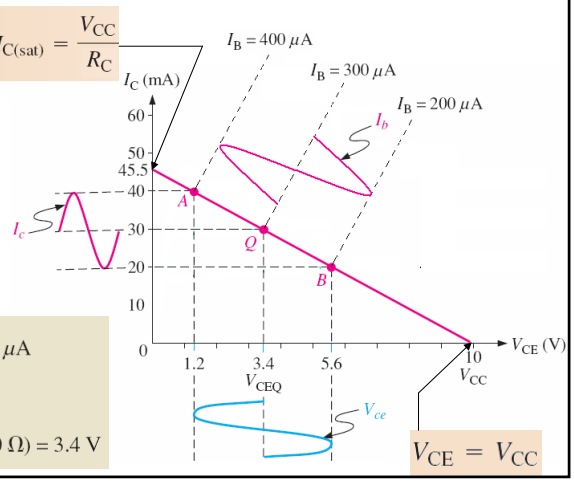

$$V_{CE} = V_{CC}$$

$$I_{BQ} = \frac{V_{BB} - 0.7\text{ V}}{R_B} = \frac{3.7\text{ V} - 0.7\text{ V}}{10\text{ k}\Omega} = 300\ \mu\text{A}$$

$$I_{CQ} = \beta_{DC} I_{BQ} = (100)(300\ \mu\text{A}) = 30\text{ mA}$$

$$V_{CEQ} = V_{CC} - I_{CQ} R_C = 10\text{ V} - (30\text{ mA})(220\ \Omega) = 3.4\text{ V}$$

2 – Voltage divider bias (most common biasing method for transistor)

In transistor circuits, it is more practical to use V_{CC} as single bias source. For this purpose we use resistive voltage divider bias (as shown) to feed the transistor base with the voltage needed

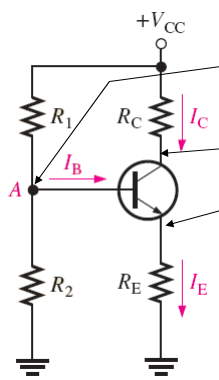

$$V_B \cong \left(\frac{R_2}{R_1 + R_2}\right) V_{CC}$$

For stiff voltage divider ($R_{IN(base)}$) >> R_2

$$V_C = V_{CC} - I_C R_C$$

$$V_E = V_B - V_{BE}$$

$$V_{CE} = V_C - V_E$$

$$I_E = \frac{V_E}{R_E} \qquad I_C \cong I_E$$

$$I_B = \frac{V_B}{R_{IN(BASE)}} = \frac{V_B}{\beta_{DC} R_E}$$

- A more exact solution for circuit analysis is to Thevenize the input circuit (use thevenin equivalent).

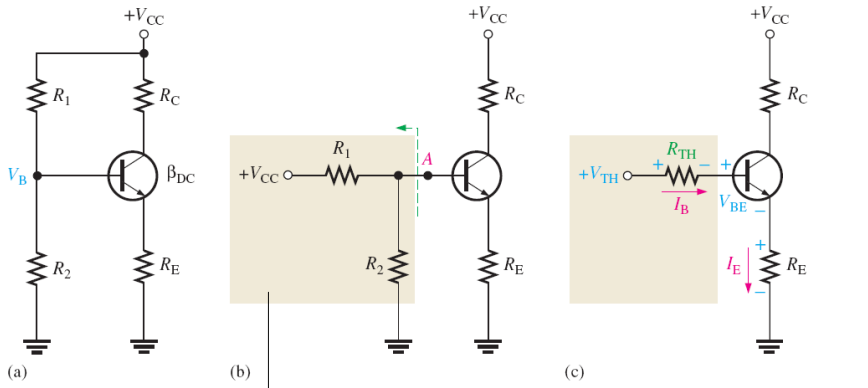

Can be done by source transformation as shown

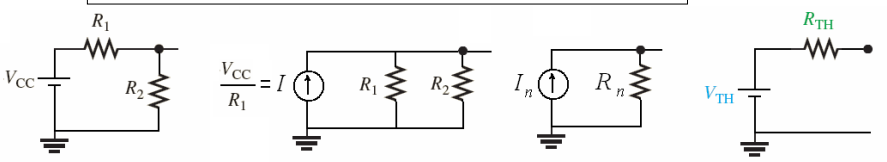

$$R_{TH} = \frac{R_1 R_2}{R_1 + R_2} \quad ;(R_1 \| R_2)$$

$$V_{TH} = \left(\frac{R_2}{R_1 + R_2}\right) V_{CC}$$

Thevenin equivalent circuit

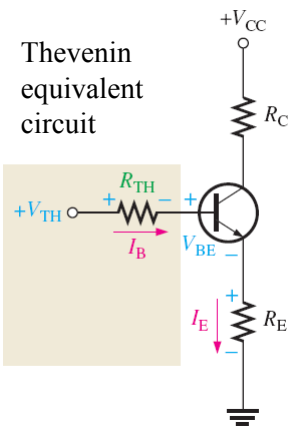

From KVL →

$$V_{TH} = I_B R_{TH} + V_{BE} + I_E R_E$$

Substituting I_E/β_{DC} for I_B,

$$\longrightarrow V_{TH} = I_E(R_E + R_{TH}/\beta_{DC}) + V_{BE}$$

$$\longrightarrow I_E = \frac{V_{TH} - V_{BE}}{R_E + R_{TH}/\beta_{DC}}$$

3 – Other biasing methods

Other four not very common biasing method exist for transistor

EMITTER BIAS

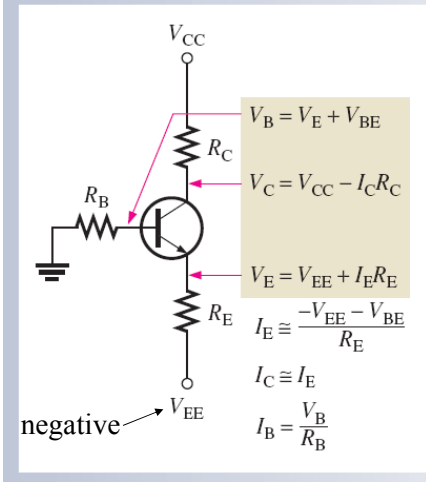

COLLECTOR-FEEDBACK BIAS

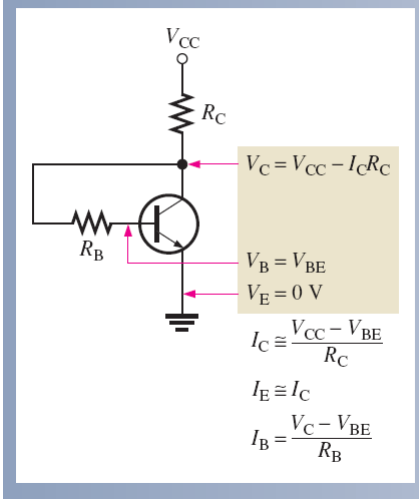

3 – Other biasing methods

BASE BIAS

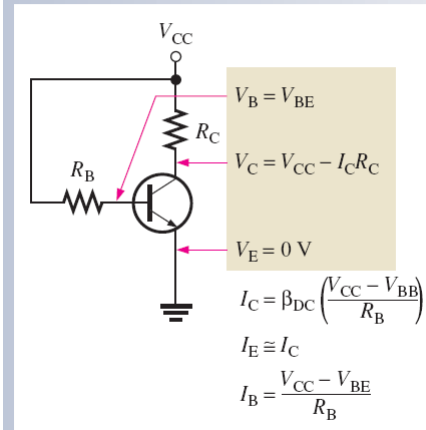
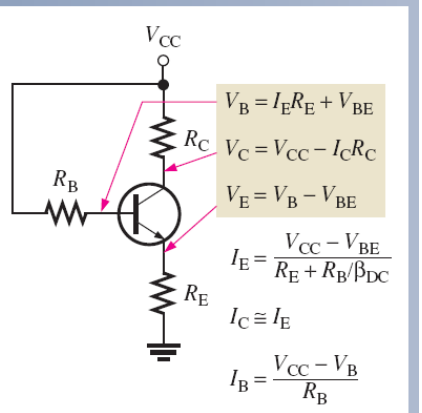
EMITTER-FEEDBACK BIAS